Stéphane Davidts

LUNGO 1



LUNGO 1 in light bronze. Metal finish code: 28

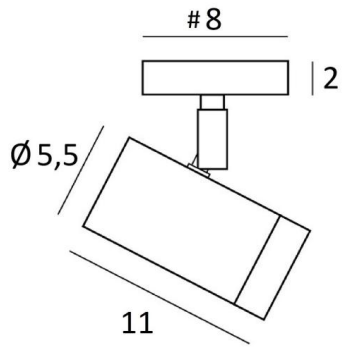

LUNGO 1 is a spotlight, mounted on a small square base, easy to install

The design of the **LUNGO** spotlight is the result of an exciting quest to incorporate a GU10 bulb into a stylish, well-crafted spotlight. Elegant and highly mobile, it combines numerous qualities: robustness, charm, ease of use and efficiency. This spotlight is crafted from solid brass by experienced artisans, and the finishes on offer are truly remarkable and unsurpassed
With its GU10 fitting, changing the bulb couldn't be simpler

LUNGO is available in an attractive range of six models, featuring between one and four spotlights, distributed across different bases

BASE

#8 x 2cm

TECHNICAL DATA

One GU10 fitting
A spotlight mounted on a ball joint, adjustable in all directions
Spotlight dimensions: Ø5.5cm x L11cm
No transformer required; this spotlight operates directly on 230V
Dimmable spotlight
A fixing plate for the ceiling base (plan in PDF)

AVAILABLE METAL FINISHES AND CODES

01 - Structured white - 5501 001

25 - Brushed brass - 5501 025

28 - Light bronze - 5501 028

29 - Brushed bronze - 5501 029

