Stéphane Davidts

NOVA



NOVA in bronze medal and light (code 78, option), in light bronze (code 28) and in brushed bronze and nickel (code 93, option)

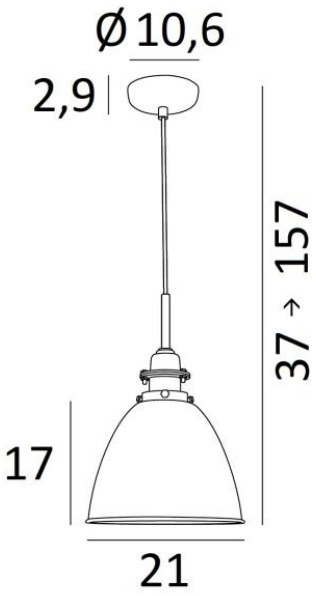

NOVA is a "**retro**" suspension with a Ø21cm brass dome. It has a metal cover that covers the fitting and gives it that old-world style. The dome's fabrication work is impressive. The technique of repoussage made it possible to create this little brass wonder. This metal, used exclusively in this manufacture, allows for many remarkable finishes, with combinations of colors. Do not hesitate to consult us
This "**Vintage**" suspension is adjustable in height and can easily be placed above a worktop or table

OVERALL SIZES

H37 → 157cm Ø21cm

BASE : Ø10,6 x 2,9cm

TECHNICAL DATA

One metal E27 fitting with ring. Dimmable suspension
Dome dimensions : Ø21cm H17cm
Suspension adjustable in height during installation
On request : a longer suspension tube
A fixing plate for the ceiling base (plan in PDF)
Mandatory use of a LED bulb (safety)

AVAILABLE METAL FINISHES AND CODES

25 - Brushed brass - 4655 025

28 - Light bronze - 4655 028

29 - Brushed bronze - 4655 029

