LAHOUN



LAHOUN in brushed bronze and brushed brass. Metal finish code: 95

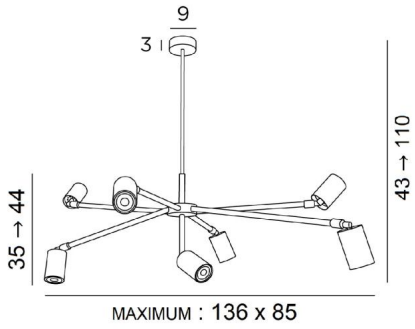

Original suspension by its design and sympathetic with its seven branches directed in all the directions
Each branch ends in a 360° movable spotlight, equipped with a GU10 bulb
This luminaire works without a transformer and is dimmable by an external dimmer. All bulbs are fully concealed by the spotlights
LAHOUN is height-adjustable and can easily be placed in a hall or above a table

OVERALL SIZES

H43→110cm L136 x 85cm

BASE : Ø9 x 3cm

TECHNICAL DATA

Seven GU10 fittings. Dimmable suspension
A decorative black ring to place around and behind each bulb
Seven spotlights. Dimensions : Ø6 x 9,2cm
The spotlights mounted on ball joints
Suspension adjustable in height. On request : a longer suspension tube
A fixing plate for the ceiling base (plan in PDF)
Mandatory use of LED bulbs (safety)

AVAILABLE METAL FINISHES AND CODES


28 - Light bronze - 4648 028


29 - Brushed bronze - 4648 029


95 - Brushed bronze & Brass - 4648 095


93 - Brushed bronze & Nickel - 4648 093

