Stéphane Davidts

ANKH



ANKH in brushed bronze with lampshade in Trento Noisette (fabric from category 3)

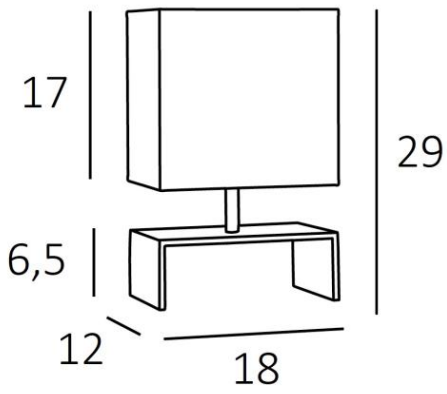

ANKH is a beautiful small table light with a sober and original design
A beautiful luminous sphere to be placed on a shelf
This lamp is the result of a beautiful work by craftsmen, specialising in brasswork and is enriched with a remarkable finish
In the evening, you will appreciate the warmth of this small rectangular lampshade, which will bring you serenity and softness

OVERALL SIZES

H29cm L18 x 12cm

BASE

Solid brass base : 18 x 12 x 6,5cm

TECHNICAL DATA

E27 fitting with ring
Switch on the cable

AVAILABLE METAL FINISHES AND CODES

29 - Brushed bronze - 2410 029

33 - Brushed nickel - 2410 033

LAMPSHADE : SIZES & CODE

18x12 - 18x12 - 17cm

Code: 2410 + fabric code
We propose more than 180 fabrics/materials/colors for lampshades

